Bathroom Accessories Set
Installation Manual

W-276(ES)

Warranty Duration

All components of this faucet system are covered under a lifetime limited warranty, ensuring they are free from defects in material and workmanship for the original purchaser.

Repair and Replacement

If the product shows defects in material or workmanship under normal use and within the warranty period, we will, at our discretion, either repair the product or provide a replacement at no cost to the original purchaser. Please note that proof of purchase (e.g., an invoice) is required when requesting service. The warranty does not cover damages caused by improper installation, misuse, or modifications.

Exclusions

We shall not be responsible for the following cases:

- Damage to the product caused by improper installation, misuse, unauthorized repair or replacement, or abuse (including damage during shipment).
- Damage to the product caused by improper dismantling after installation.
- Damage resulting from abnormal water pressure or impurities in water pipes, which is not covered under this warranty.
- Rust on the product due to insufficient care and maintenance, which is not covered under this warranty.
- Damage caused by natural disasters such as fire, flood, earthquake, lightning storms, etc., which is not covered under this warranty.

I hope this helps! If you have any further questions or concerns, please let me know.

Having Trouble? Contact us.

Email: info@faucetsupport.com

Toll Free: 1-888-969-6880

M8634
SFS-2008

CONTENT

Bathroom Accessories Set Installation Instructions ---------- (1-2)

CONTENIDO

Instrucciones de instalación del juego de accesorios de baño ------ (3-4)

◆ Usage and Maintenance

1.Regularly check the tightness of the accessories to ensure they are secure and safe.

2.Clean using mild detergents, avoiding strong acidic or alkaline cleaning products.

3.Replace any damaged accessories promptly.

◆ Bathroom Accessories Parts List

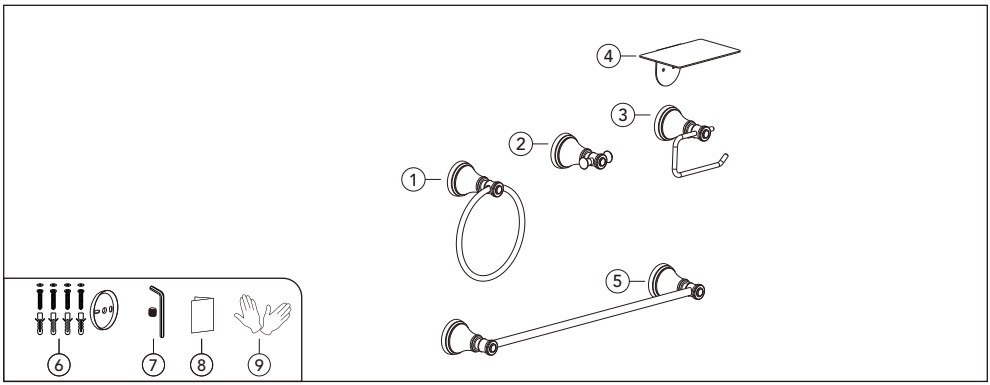

No.	Part name	Qty	No.	Part name	Qty
1	Towel hook	1	6	Accessory Screw Components	1set
2	Robe hook	1	7	Fixing screw pack	1set
3	Toilet paper holder	1	8	Instruction manual	1
4	Storage shelf	1	9	Gloves	1 pair
5	Single towel bar	1			

◆ Installation Steps for Toilet Paper Holder and Storage Shelf

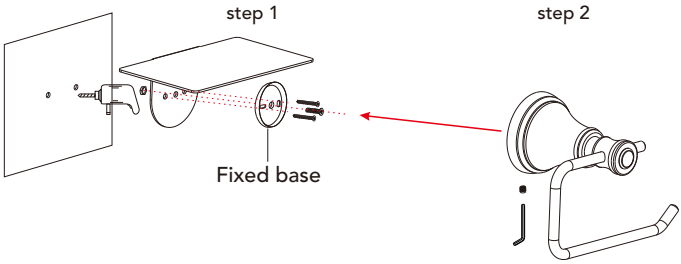

Step 1:Align the screw holes of the fixed base with those on the storage shelf. Install the fixed base onto the storage shelf as shown in the diagram, and secure it using screws and nuts;Next, align the fixed base with the screw holes on the wall and fasten it using screws.

Note: Make sure to fasten the fixed base as far down as possible; otherwise, the toilet paper holder may not be able to connect properly with the fixed base.

Step 2:Attach the toilet paper holder to the fixed base and tighten the screws.

◆ Installation of Other Bathroom Accessories

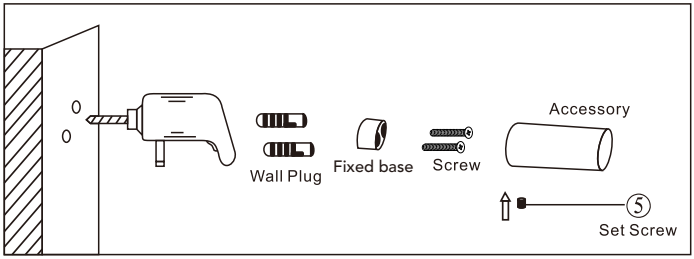

1.Determine Positions:
Mark the desired locations on the wall for each accessory.

2.Drill Holes and Install Wall Plugs:
Use an electric drill to create holes at the marked positions, then insert the wall plugs securely.

3.Fix Mounting Plates:
Secure the fixed base with screws and loosen the set screw (but do not completely remove it). Place the accessory over the mounting plate, ensuring the set screw is at the bottom.

◆ Uso y mantenimiento

1. Revise regularmente el ajuste de los accesorios para asegurarse de que estén seguros y bien sujetos.
2. Limpie utilizando detergentes suaves, evitando productos de limpieza fuertemente ácidos o alcalinos.
3. Reemplace de inmediato cualquier accesorio dañado.

◆ Lista de piezas de accesorios de baño

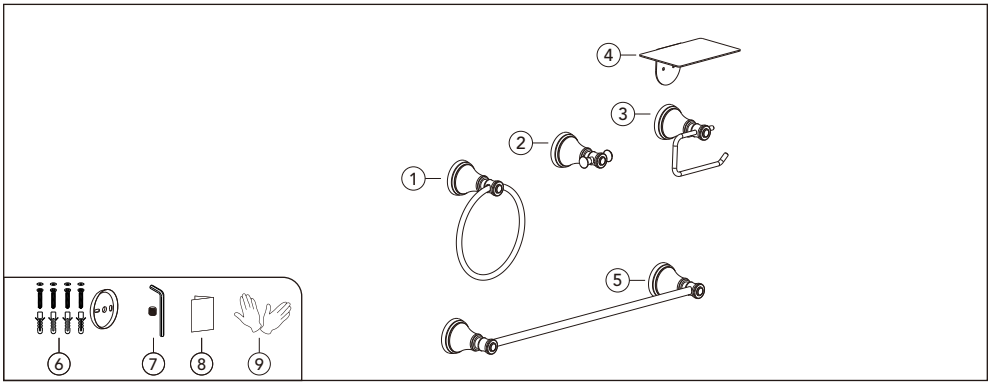

N.°	Nombre de la pieza	Cantidad	N.°	Nombre de la pieza	Cantidad
1	Aro para toalla	1	6	Componentes de tornillos para accesorios	1 juego
2	Gancho para bata	1	7	Paquete de tornillos de fijación	1 juego
3	Portarrollos de papel higiénico	1	8	Manual de instrucciones	1
4	Estante de almacenamiento	1	9	Guantes	1 par
5	Barra de toalla individual	1			

- **Pasos de instalación para el portarrollos de papel higiénico y el estante de almacenamiento**

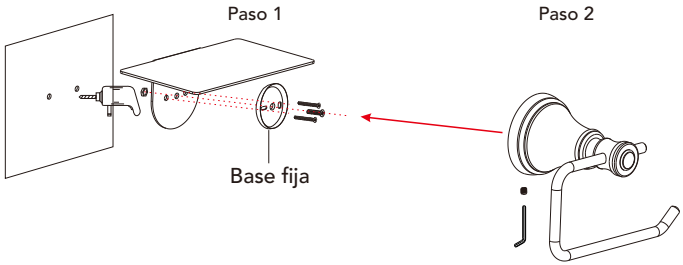

Paso 1:Alinee los orificios para tornillos de la base fija con los del estante de almacenamiento. Instale la base fija en el estante tal como se muestra en el diagrama y asegúrela utilizando tornillos y tuercas. Luego, alinee la base fija con los orificios en la pared y fíjela usando tornillos.

Nota: Asegúrese de fijar la base lo más abajo posible; de lo contrario, el portarrollos de papel higiénico podría no conectarse correctamente con la base fija.

Paso 2:Coloque el portarrollos de papel higiénico en la base fija y apriete los tornillos.

- **Instalación de otros accesorios de baño**

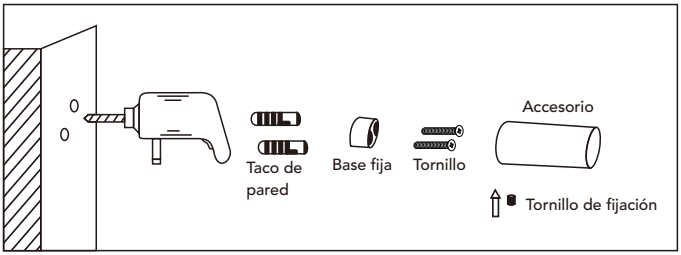

1. Determinar las posiciones:
   Marque los lugares deseados en la pared para cada accesorio.
2. Perforar agujeros e instalar los tacos de pared:
   Utilice un taladro eléctrico para hacer agujeros en las posiciones marcadas, luego inserte firmemente los tacos de pared.
3. Fijar las placas de montaje:
   Asegure la base fija con tornillos y afloje el tornillo de fijación (sin retirarlo completamente). Coloque el accesorio sobre la placa de montaje, asegurándose de que el tornillo de fijación quede en la parte inferior.